HIDDEN QUANTUM MEMORY: IS MEMORY THERE WHEN SOMEBODY LOOKS?

PHILIP TARANTO & SIMON MILZ

ARXIV:2204.08298

IN QUANTUM THEORY, THERE IS OFTEN A DISTINCTION BETWEEN STRUCTURAL AND OPERATIONAL PROPERTIES

STRUCTURAL

COHERENCE

DISCORD

ENTANGLEMENT

NON-COMMUTATIVITY

…

IN QUANTUM THEORY, THERE IS OFTEN A DISTINCTION BETWEEN STRUCTURAL AND OPERATIONAL PROPERTIES

STRUCTURAL

COHERENCE

DISCORD

ENTANGLEMENT

NON-COMMUTATIVITY

…

OPERATIONAL

BELL NON-LOCALITY

CONTEXTUALITY

LEGGETT-GARG

KOLMOGOROV INCONSISTENCY

IN QUANTUM THEORY, THERE IS OFTEN A DISTINCTION BETWEEN STRUCTURAL AND OPERATIONAL PROPERTIES

- RELATIONSHIP IS WELL STUDIED IN THE SPATIAL SETTING, LESS SO IN THE **TEMPORAL** REALM
- WHY? **MEASUREMENT INVASIVENESS** CONFLATES THE EFFECTS OF THE PROCESS WITH THOSE OF THE AGENT… LEADING TO A LACK OF CLARITY IN DEFINING A QUANTUM STOCHASTIC PROCESS

IN QUANTUM THEORY, THERE IS OFTEN A DISTINCTION BETWEEN STRUCTURAL AND OPERATIONAL PROPERTIES

- RELATIONSHIP IS WELL STUDIED IN THE SPATIAL SETTING, LESS SO IN THE **TEMPORAL** REALM
- WHY? **MEASUREMENT INVASIVENESS** CONFLATES THE EFFECTS OF THE PROCESS WITH THOSE OF THE AGENT… LEADING TO A LACK OF CLARITY IN DEFINING A QUANTUM STOCHASTIC PROCESS

S. MILZ, D. EGLOFF, **PT**, T. THEURER, M.B. PLENIO, A. SMIRNE, S.F. HUELGA; PHYS. REV. X **10**, 041049 (2020)
F. SAKULDEE, **PT**, S. MILZ; PHYS. REV. A **106**, 022416 (2022)

WE WILL ANALYSE THE CONNECTION BETWEEN AN OPERATIONAL AND A STRUCTURAL NOTION OF MEMORYLESSNESS

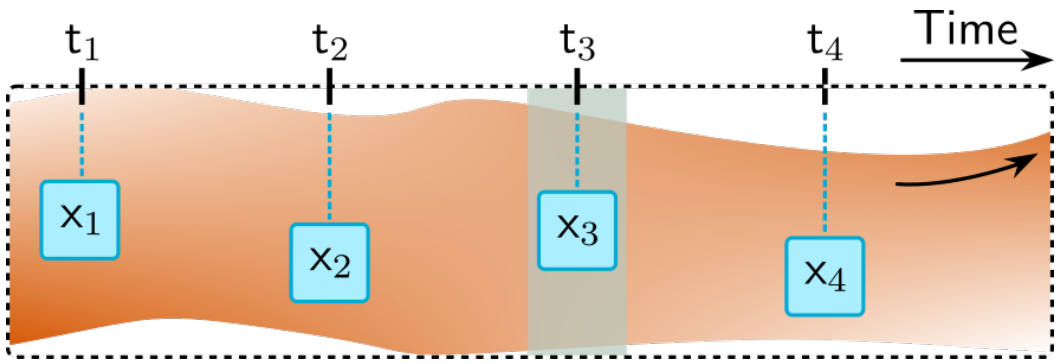

$$\mathbb{P}(x_4, x_3, x_2, x_1)$$

WE WILL ANALYSE THE CONNECTION BETWEEN AN OPERATIONAL AND A STRUCTURAL NOTION OF MEMORYLESSNESS

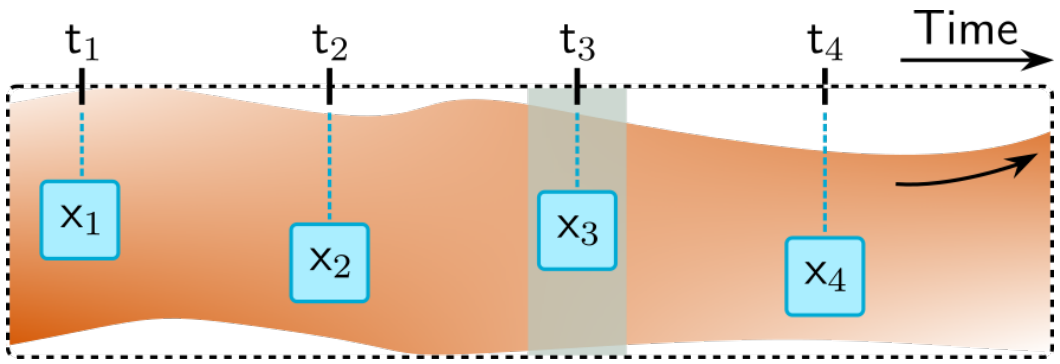

$$\mathbb{P}(x_4, x_3, x_2, x_1)$$

OPERATIONAL: MARKOVIANITY

$$\mathbb{P}(x_4|x_3, x_2, x_1) = \mathbb{P}(x_4|x_3)$$
$$\mathbb{P}(x_3|x_2, x_1) = \mathbb{P}(x_3|x_2)$$

- **CONDITIONAL INDEPENDENCE** OF ALL BUT THE MOST RECENT OUTCOME

WE WILL ANALYSE THE CONNECTION BETWEEN AN OPERATIONAL AND A STRUCTURAL NOTION OF MEMORYLESSNESS

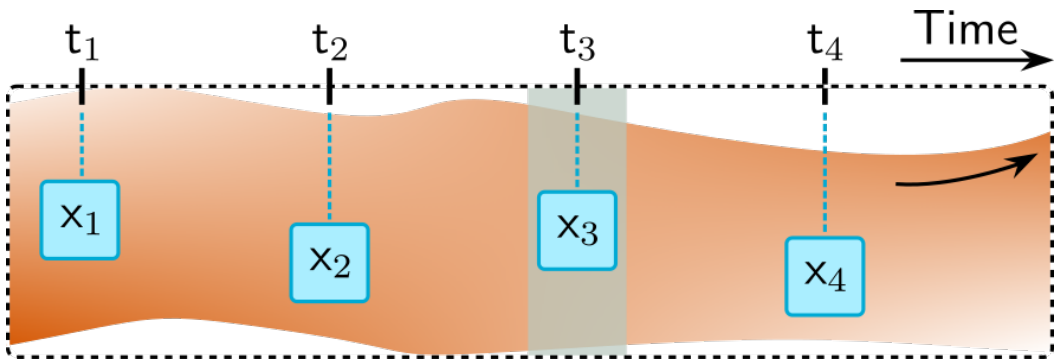

$$\mathbb{P}(x_4, x_3, x_2, x_1)$$

OPERATIONAL: MARKOVIANITY

$$\mathbb{P}(x_4|x_3, x_2, x_1) = \mathbb{P}(x_4|x_3)$$
$$\mathbb{P}(x_3|x_2, x_1) = \mathbb{P}(x_3|x_2)$$

- **CONDITIONAL INDEPENDENCE** OF ALL BUT THE MOST RECENT OUTCOME

STRUCTURAL: MEMORYLESS

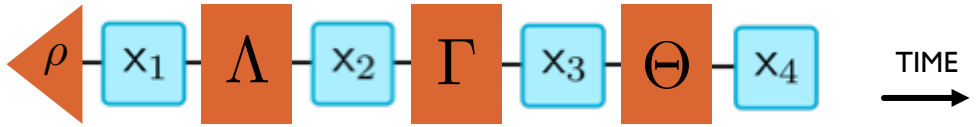

- SEQUENCE OF **INDEPENDENT** QUANTUM CHANNELS DESCRIBING DYNAMICS BETWEEN MEASUREMENTS

IN THE CLASSICAL WORLD, THESE NOTIONS ARE EQUIVALENT…

CLASSICAL EQUIVALENCE

SUPPOSE ONE RECORDS **MARKOVIAN** STATISTICS:

$$\mathbb{P}(x_4, x_3, x_2, x_1) = \mathbb{P}(x_4|x_3)\mathbb{P}(x_3|x_2)\mathbb{P}(x_2|x_1)\mathbb{P}(x_1)$$

IN THE CLASSICAL WORLD, THESE NOTIONS ARE EQUIVALENT…

CLASSICAL EQUIVALENCE

SUPPOSE ONE RECORDS **MARKOVIAN** STATISTICS:

$$\mathbb{P}(x_4, x_3, x_2, x_1) = \mathbb{P}(x_4|x_3)\mathbb{P}(x_3|x_2)\mathbb{P}(x_2|x_1)\mathbb{P}(x_1)$$

ASSUMING THEY COME FROM THE CLASSICAL WORLD, ONE CAN **ALWAYS CONSTRUCT** A MEMORYLESS MODEL:

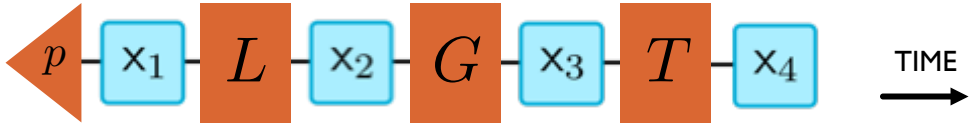

IN THE CLASSICAL WORLD, THESE NOTIONS ARE EQUIVALENT…

CLASSICAL EQUIVALENCE

SUPPOSE ONE RECORDS **MARKOVIAN** STATISTICS:

$$\mathbb{P}(x_4, x_3, x_2, x_1) = \mathbb{P}(x_4|x_3)\mathbb{P}(x_3|x_2)\mathbb{P}(x_2|x_1)\mathbb{P}(x_1)$$

ASSUMING THEY COME FROM THE CLASSICAL WORLD, ONE CAN **ALWAYS CONSTRUCT** A MEMORYLESS MODEL:

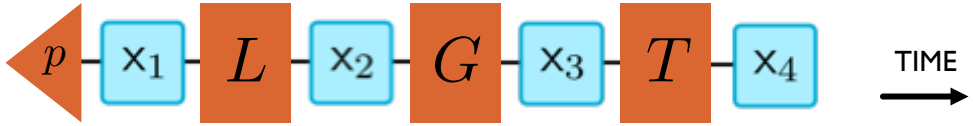

$$\langle x_1|p := \mathbb{P}(x_1)$$

$$\langle x_2|L|x_1\rangle := \mathbb{P}(x_2|x_1)$$

$$\langle x_3|G|x_2\rangle := \mathbb{P}(x_3|x_2)$$

$$\langle x_4|T|x_3\rangle := \mathbb{P}(x_4|x_3)$$

IN THE CLASSICAL WORLD, THESE NOTIONS ARE EQUIVALENT…

CLASSICAL EQUIVALENCE

SUPPOSE ONE RECORDS **MARKOVIAN** STATISTICS:

$$\mathbb{P}(x_4, x_3, x_2, x_1) = \mathbb{P}(x_4|x_3)\mathbb{P}(x_3|x_2)\mathbb{P}(x_2|x_1)\mathbb{P}(x_1)$$

ASSUMING THEY COME FROM THE CLASSICAL WORLD, ONE CAN **ALWAYS CONSTRUCT** A MEMORYLESS MODEL:

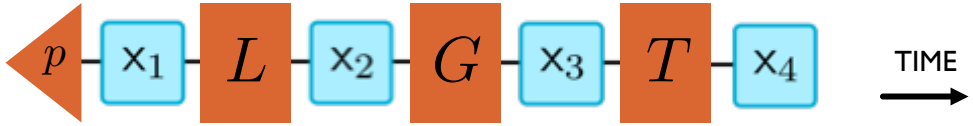

$$\langle x_1|p := \mathbb{P}(x_1)$$

$$\langle x_2|L|x_1\rangle := \mathbb{P}(x_2|x_1)$$

$$\langle x_3|G|x_2\rangle := \mathbb{P}(x_3|x_2)$$

$$\langle x_4|T|x_3\rangle := \mathbb{P}(x_4|x_3)$$

- INITIAL STATE IS A PROBABILITY DISTRIBUTION AND INTERMEDIATE DYNAMICS ARE STOCHASTIC MATRICES BY CONSTRUCTION
- MODEL FAITHFULLY REPRODUCES ALL STATISTICS, INCLUDING "LOWER-ORDER" STATISTICS WHERE NO MEASUREMENT IS MADE AT INTERMEDIARY TIMES

IN THE CLASSICAL WORLD, THESE NOTIONS ARE EQUIVALENT…

CLASSICAL EQUIVALENCE

SUPPOSE ONE RECORDS **MARKOVIAN** STATISTICS:

$$\mathbb{P}(x_4, x_3, x_2, x_1) = \mathbb{P}(x_4|x_3)\mathbb{P}(x_3|x_2)\mathbb{P}(x_2|x_1)\mathbb{P}(x_1)$$

ASSUMING THEY COME FROM THE CLASSICAL WORLD, ONE CAN **ALWAYS CONSTRUCT** A MEMORYLESS MODEL:

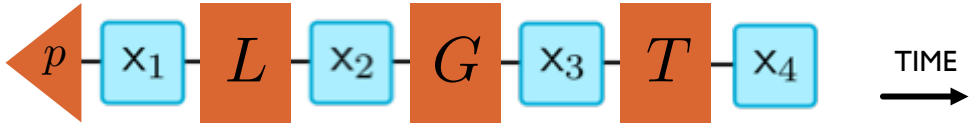

$$\langle x_1|p := \mathbb{P}(x_1)$$

$$\langle x_2|L|x_1\rangle := \mathbb{P}(x_2|x_1)$$

$$\langle x_3|G|x_2\rangle := \mathbb{P}(x_3|x_2)$$

$$\langle x_4|T|x_3\rangle := \mathbb{P}(x_4|x_3)$$

- INITIAL STATE IS A PROBABILITY DISTRIBUTION AND INTERMEDIATE DYNAMICS ARE STOCHASTIC MATRICES BY CONSTRUCTION
- MODEL FAITHFULLY REPRODUCES ALL STATISTICS, INCLUDING "LOWER-ORDER" STATISTICS WHERE NO MEASUREMENT IS MADE AT INTERMEDIARY TIMES

$$\mathbb{P}(x_3|x_1) = \sum_{x_2} \mathbb{P}(x_3|x_2)\mathbb{P}(x_2|x_1) = \sum_{x_2} \langle x_3|G|x_2\rangle \langle x_2|L|x_1\rangle = \langle x_3|G \cdot L|x_1\rangle$$

IN THE CLASSICAL WORLD, THESE NOTIONS ARE EQUIVALENT…

CLASSICAL EQUIVALENCE

SUPPOSE ONE RECORDS **MARKOVIAN** STATISTICS:

$$\mathbb{P}(x_4, x_3, x_2, x_1) = \mathbb{P}(x_4|x_3)\mathbb{P}(x_3|x_2)\mathbb{P}(x_2|x_1)\mathbb{P}(x_1)$$

ASSUMING THEY COME FROM THE CLASSICAL WORLD, ONE CAN **ALWAYS CONSTRUCT** A MEMORYLESS MODEL:

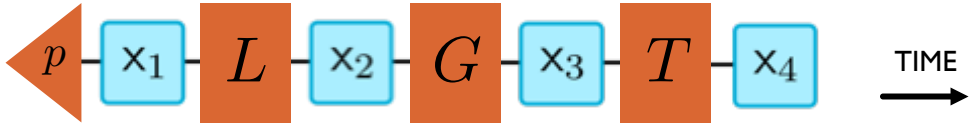

$$\langle x_1|p := \mathbb{P}(x_1)$$

$$\langle x_2|L|x_1\rangle := \mathbb{P}(x_2|x_1)$$

$$\langle x_3|G|x_2\rangle := \mathbb{P}(x_3|x_2)$$

$$\langle x_4|T|x_3\rangle := \mathbb{P}(x_4|x_3)$$

- INITIAL STATE IS A PROBABILITY DISTRIBUTION AND INTERMEDIATE DYNAMICS ARE STOCHASTIC MATRICES BY CONSTRUCTION
- MODEL FAITHFULLY REPRODUCES ALL STATISTICS, INCLUDING "LOWER-ORDER" STATISTICS WHERE NO MEASUREMENT IS MADE AT INTERMEDIARY TIMES

$$\mathbb{P}(x_3|x_1) = \sum_{x_2} \mathbb{P}(x_3|x_2)\mathbb{P}(x_2|x_1) = \sum_{x_2} \langle x_3|G|x_2\rangle \langle x_2|L|x_1\rangle = \langle x_3|G \cdot L|x_1\rangle$$

…SAME FOR SOME QUANTUM PROCESSES & MEASUREMENTS; BUT NOT IN GENERAL

QUANTUM NON-EQUIVALENCE

1. A MEMORYLESS QUANTUM PROCESS DOES NOT NECESSARILY LEAD TO MARKOVIAN STATISTICS

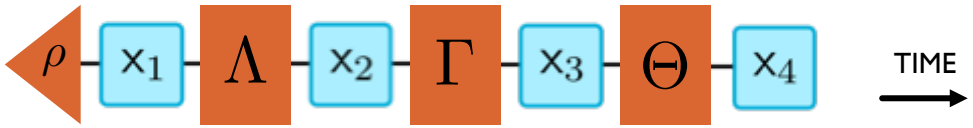

…SAME FOR SOME QUANTUM PROCESSES & MEASUREMENTS; BUT NOT IN GENERAL

QUANTUM NON-EQUIVALENCE

1. A MEMORYLESS QUANTUM PROCESS DOES NOT NECESSARILY LEAD TO MARKOVIAN STATISTICS

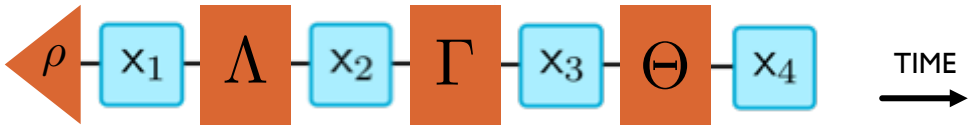

PROJECTIVE MEASUREMENTS: MEMORYLESS => MARKOVIAN

…SAME FOR SOME QUANTUM PROCESSES & MEASUREMENTS; BUT NOT IN GENERAL

QUANTUM NON-EQUIVALENCE

1. A MEMORYLESS QUANTUM PROCESS DOES NOT NECESSARILY LEAD TO MARKOVIAN STATISTICS

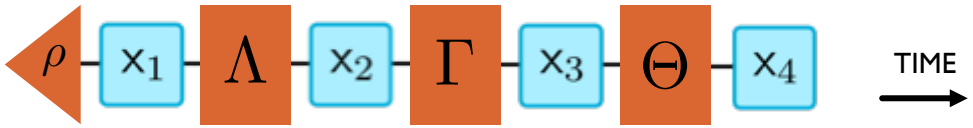

PROJECTIVE MEASUREMENTS: MEMORYLESS => MARKOVIAN

2. A QUANTUM PROCESS WITH MEMORY CAN LEAD TO MARKOVIAN STATISTICS FOR CERTAIN MEASUREMENTS

MEASUREMENTS CAN BE TOMOGRAPHICALLY INCOMPLETE

…SAME FOR SOME QUANTUM PROCESSES & MEASUREMENTS; BUT NOT IN GENERAL

QUANTUM NON-EQUIVALENCE

1. A MEMORYLESS QUANTUM PROCESS DOES NOT NECESSARILY LEAD TO MARKOVIAN STATISTICS

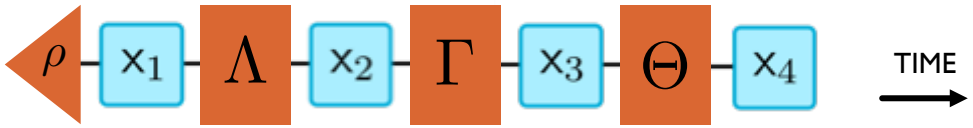

PROJECTIVE MEASUREMENTS: MEMORYLESS => MARKOVIAN

2. A QUANTUM PROCESS WITH MEMORY CAN LEAD TO MARKOVIAN STATISTICS FOR CERTAIN MEASUREMENTS

MEASUREMENTS CAN BE TOMOGRAPHICALLY INCOMPLETE

3. EXPERIMENTER ALLOWED TO "DO NOTHING" AT ANY TIMES: FAITHFUL REPRODUCTION OF INTERMEDIATE / SUB-STATISTICS IS NOT GUARANTEED AS IN THE CLASSICAL CASE

MEASUREMENTS ARE GENERALLY INVASIVE

KEY QUESTION: CAN WE CONSTRUCT A MEMORYLESS QUANTUM MODEL FOR MARKOVIAN STATISTICS?

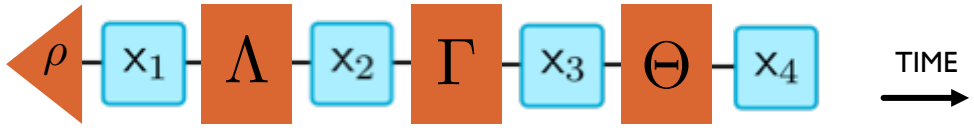

QUESTION:

SUPPOSE WE PROJECTIVELY MEASURE A QUANTUM SYSTEM SEQUENTIALLY AND RECORD MARKOVIAN STATISTICS: CAN WE ALWAYS CONSTRUCT A MEMORYLESS QUANTUM MODEL?

- CANNOT BE UNIQUE LIKE CLASSICAL CASE, AS PROJECTIVE MEASUREMENTS ARE NOT INFORMATIONALLY COMPLETE
- NEED TO ADDITIONALLY ENSURE CORRECT REPRODUCTION OF "SUB-STATISTICS"

KEY QUESTION: CAN WE CONSTRUCT A MEMORYLESS QUANTUM MODEL FOR MARKOVIAN STATISTICS?

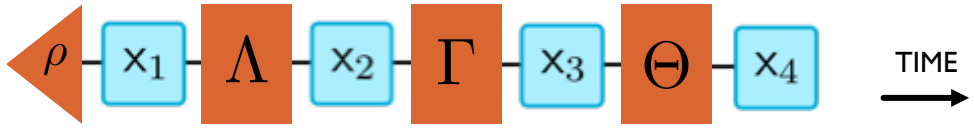

QUESTION:

SUPPOSE WE PROJECTIVELY MEASURE A QUANTUM SYSTEM SEQUENTIALLY AND RECORD MARKOVIAN STATISTICS: CAN WE ALWAYS CONSTRUCT A MEMORYLESS QUANTUM MODEL?

- CANNOT BE UNIQUE LIKE CLASSICAL CASE, AS PROJECTIVE MEASUREMENTS ARE NOT INFORMATIONALLY COMPLETE
- NEED TO ADDITIONALLY ENSURE CORRECT REPRODUCTION OF "SUB-STATISTICS"

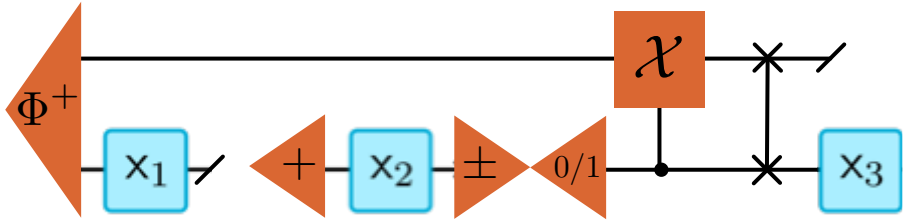

KEY QUESTION: CAN WE CONSTRUCT A MEMORYLESS QUANTUM MODEL FOR MARKOVIAN STATISTICS?

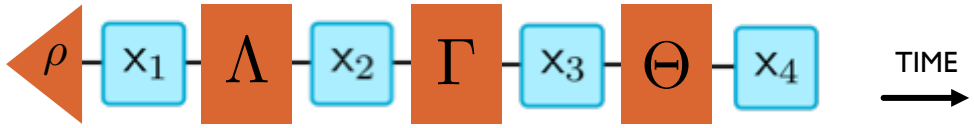

QUESTION:

SUPPOSE WE PROJECTIVELY MEASURE A QUANTUM SYSTEM SEQUENTIALLY AND RECORD MARKOVIAN STATISTICS: CAN WE ALWAYS CONSTRUCT A MEMORYLESS QUANTUM MODEL?

- CANNOT BE UNIQUE LIKE CLASSICAL CASE, AS PROJECTIVE MEASUREMENTS ARE NOT INFORMATIONALLY COMPLETE
- NEED TO ADDITIONALLY ENSURE CORRECT REPRODUCTION OF "SUB-STATISTICS"

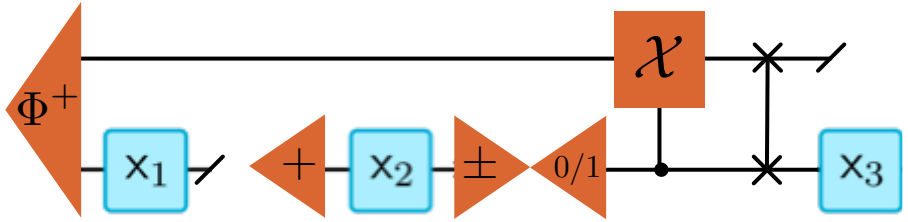

$$\mathbb{P}(x_3, x_2, x_1) = \frac{1}{8} \quad \forall\, x_3, x_2, x_1$$

$$\mathbb{P}(x_3|x_2, x_1) = \mathbb{P}(x_3|x_2) = \mathbb{P}(x_2|x_1) = \frac{1}{2}$$

$$\mathbb{P}(x_3|\mathcal{I}_2, x_1) = \delta_{x_3 x_1}$$

KEY QUESTION: CAN WE CONSTRUCT A MEMORYLESS QUANTUM MODEL FOR MARKOVIAN STATISTICS?

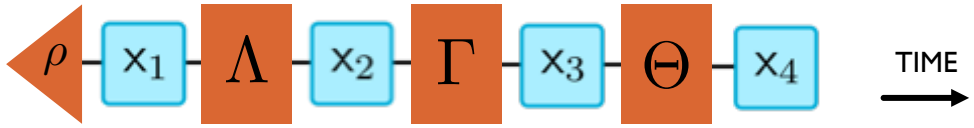

QUESTION:

SUPPOSE WE PROJECTIVELY MEASURE A QUANTUM SYSTEM SEQUENTIALLY AND RECORD MARKOVIAN STATISTICS: CAN WE ALWAYS CONSTRUCT A MEMORYLESS QUANTUM MODEL?

- CANNOT BE UNIQUE LIKE CLASSICAL CASE, AS PROJECTIVE MEASUREMENTS ARE NOT INFORMATIONALLY COMPLETE
- NEED TO ADDITIONALLY ENSURE CORRECT REPRODUCTION OF "SUB-STATISTICS"

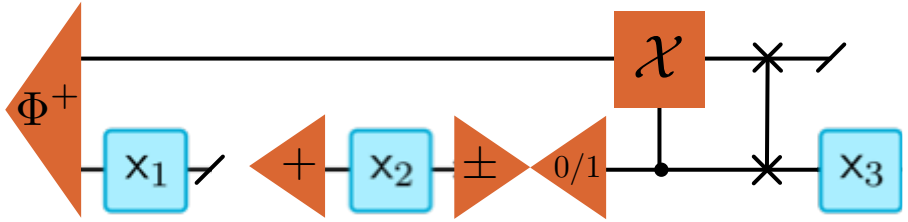

$$\mathbb{P}(x_3, x_2, x_1) = \frac{1}{8} \quad \forall\, x_3, x_2, x_1$$

$$\mathbb{P}(x_3|x_2, x_1) = \mathbb{P}(x_3|x_2) = \mathbb{P}(x_2|x_1) = \frac{1}{2}$$

$$\mathbb{P}(x_3|\mathcal{I}_2, x_1) = \delta_{x_3 x_1}$$

MEMORYLESS MODEL

$$\langle x_1|\rho|x_1\rangle = \langle x_2|\Lambda[|x_1\rangle\langle x_1|]|x_2\rangle = \langle x_3|\Gamma[|x_2\rangle\langle x_2|]|x_3\rangle = \frac{1}{2}$$

$$\langle x_3|\Gamma \circ \Lambda[|x_1\rangle\langle x_1|]|x_3\rangle = \delta_{x_3 x_1}$$

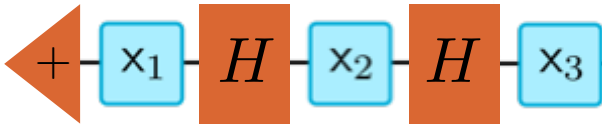

KEY QUESTION: CAN WE CONSTRUCT A MEMORYLESS QUANTUM MODEL FOR MARKOVIAN STATISTICS?

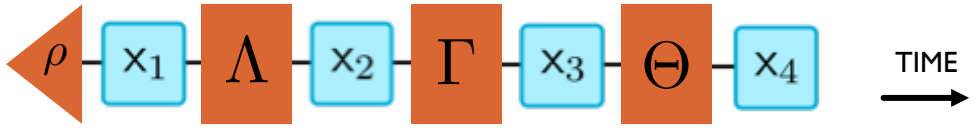

QUESTION:

SUPPOSE WE PROJECTIVELY MEASURE A QUANTUM SYSTEM SEQUENTIALLY AND RECORD MARKOVIAN STATISTICS: CAN WE ALWAYS CONSTRUCT A MEMORYLESS QUANTUM MODEL?

- CANNOT BE UNIQUE LIKE CLASSICAL CASE, AS PROJECTIVE MEASUREMENTS ARE NOT INFORMATIONALLY COMPLETE
- NEED TO ADDITIONALLY ENSURE CORRECT REPRODUCTION OF "SUB-STATISTICS"

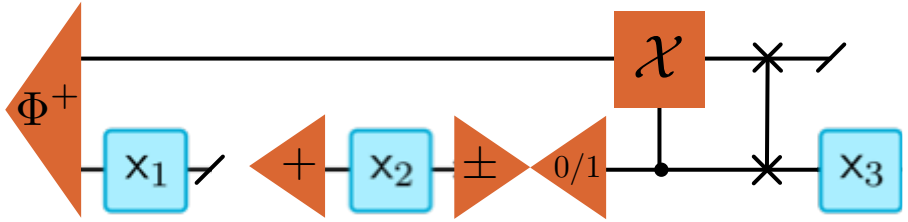

$$\mathbb{P}(x_3, x_2, x_1) = \frac{1}{8} \quad \forall\, x_3, x_2, x_1$$

$$\mathbb{P}(x_3|x_2, x_1) = \mathbb{P}(x_3|x_2) = \mathbb{P}(x_2|x_1) = \frac{1}{2}$$

$$\mathbb{P}(x_3|\mathcal{I}_2, x_1) = \delta_{x_3 x_1}$$

MEMORYLESS MODEL

$$\langle x_1|\rho|x_1\rangle = \langle x_2|\Lambda[|x_1\rangle\langle x_1|]|x_2\rangle = \langle x_3|\Gamma[|x_2\rangle\langle x_2|]|x_3\rangle = \frac{1}{2}$$

$$\langle x_3|\Gamma \circ \Lambda[|x_1\rangle\langle x_1|]|x_3\rangle = \delta_{x_3 x_1}$$

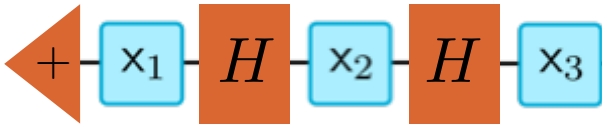

… CAN WE ALWAYS CONSTRUCT SUCH A MEMORYLESS MODEL TO EXPLAIN MARKOVIAN STATISTICS?

KEY QUESTION: CAN WE CONSTRUCT A MEMORYLESS QUANTUM MODEL FOR MARKOVIAN STATISTICS?

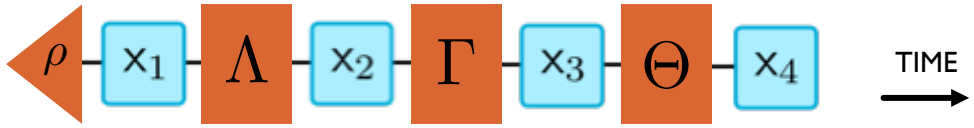

QUESTION:

SUPPOSE WE PROJECTIVELY MEASURE A QUANTUM SYSTEM SEQUENTIALLY AND RECORD MARKOVIAN STATISTICS: CAN WE ALWAYS CONSTRUCT A MEMORYLESS QUANTUM MODEL?

- CANNOT BE UNIQUE LIKE CLASSICAL CASE, AS PROJECTIVE MEASUREMENTS ARE NOT INFORMATIONALLY COMPLETE
- NEED TO ADDITIONALLY ENSURE CORRECT REPRODUCTION OF "SUB-STATISTICS"

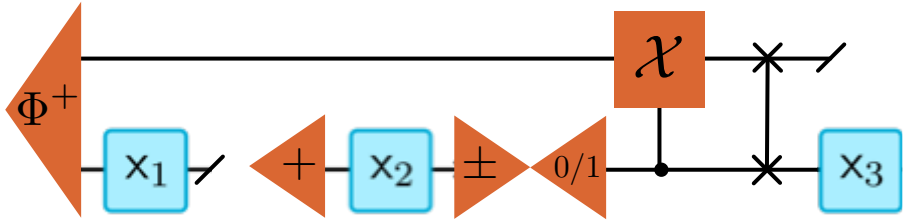

$$\mathbb{P}(x_3, x_2, x_1) = \frac{1}{8} \quad \forall\, x_3, x_2, x_1$$

$$\mathbb{P}(x_3|x_2, x_1) = \mathbb{P}(x_3|x_2) = \mathbb{P}(x_2|x_1) = \frac{1}{2}$$

$$\mathbb{P}(x_3|\mathcal{I}_2, x_1) = \delta_{x_3 x_1}$$

MEMORYLESS MODEL

$$\langle x_1|\rho|x_1\rangle = \langle x_2|\Lambda[|x_1\rangle\langle x_1|]|x_2\rangle = \langle x_3|\Gamma[|x_2\rangle\langle x_2|]|x_3\rangle = \frac{1}{2}$$

$$\langle x_3|\Gamma \circ \Lambda[|x_1\rangle\langle x_1|]|x_3\rangle = \delta_{x_3 x_1}$$

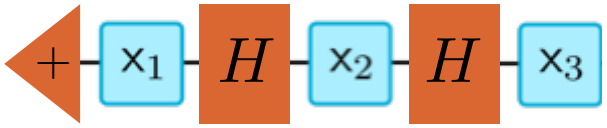

… DOES A MEMORYLESS MODEL TO DESCRIBE MARKOVIAN STATISTICS ALWAYS EXIST?

HIDDEN QUANTUM MEMORY: A CONTRADICTION TO THE EXISTENCE OF A MEMORYLESS DESCRIPTION

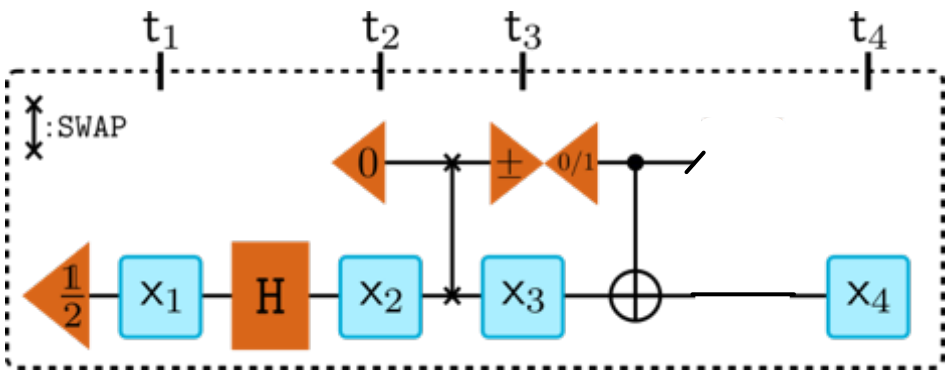

HIDDEN QUANTUM MEMORY: A CONTRADICTION TO THE EXISTENCE OF A MEMORYLESS DESCRIPTION

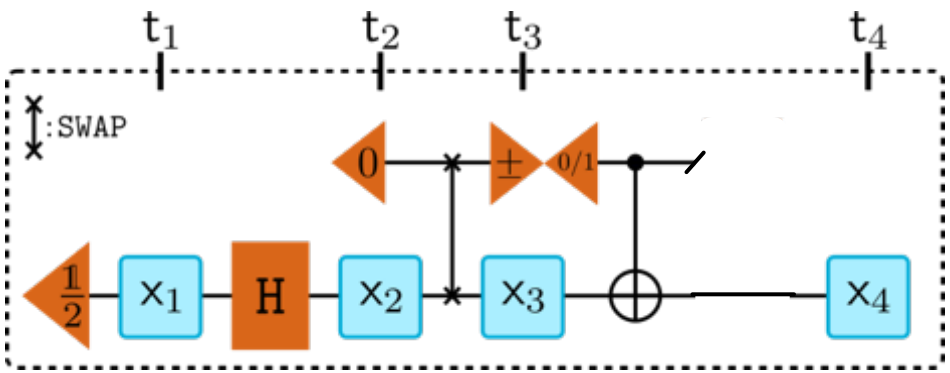

4-POINT STATISTICS ARE MARKOVIAN

$$\mathbb{P}(x_1) = \frac{1}{2}$$

$$\mathbb{P}(x_2|x_1) = \frac{1}{2}$$

$$\mathbb{P}(x_3|x_2, x_1) = \mathbb{P}(x_3|x_2) = \begin{cases} 1 & x_3 = 0 \\ 0 & x_3 = 1 \end{cases}$$

$$\mathbb{P}(x_4|x_3, x_2, x_1) = \mathbb{P}(x_4|x_3) = \begin{cases} \frac{1}{2} & x_3 = 0 \\ 0 & x_3 = 1 \end{cases}$$

HIDDEN QUANTUM MEMORY: A CONTRADICTION TO THE EXISTENCE OF A MEMORYLESS DESCRIPTION

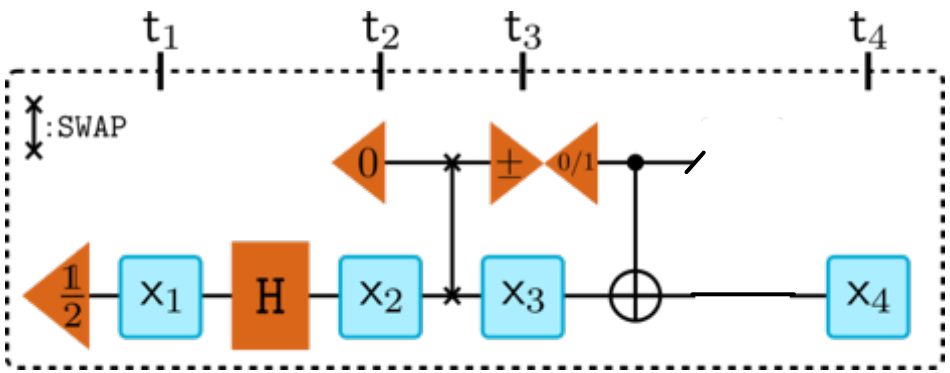

4-POINT STATISTICS ARE MARKOVIAN

$$\mathbb{P}(x_1) = \frac{1}{2}$$

$$\mathbb{P}(x_2|x_1) = \frac{1}{2}$$

$$\mathbb{P}(x_3|x_2, x_1) = \mathbb{P}(x_3|x_2) = \begin{cases} 1 & x_3 = 0 \\ 0 & x_3 = 1 \end{cases}$$

$$\mathbb{P}(x_4|x_3, x_2, x_1) = \mathbb{P}(x_4|x_3) = \begin{cases} \frac{1}{2} & x_3 = 0 \\ 0 & x_3 = 1 \end{cases}$$

NON-MARKOVIAN SUBSTATISTICS

$$\mathbb{P}(x_1) = \frac{1}{2}$$

$$\mathbb{P}(x_3|\mathcal{I}_2, x_1) = \begin{cases} 1 & x_3 = 0 \\ 0 & x_3 = 1 \end{cases}$$

$$\mathbb{P}(x_4|x_3, \mathcal{I}_2, x_1) = \begin{cases} \delta_{x_4 x_1} & x_3 = 0 \\ 0 & x_3 = 1 \end{cases} \neq \mathbb{P}(x_4|x_3)$$

HIDDEN QUANTUM MEMORY: A CONTRADICTION TO THE EXISTENCE OF A MEMORYLESS DESCRIPTION

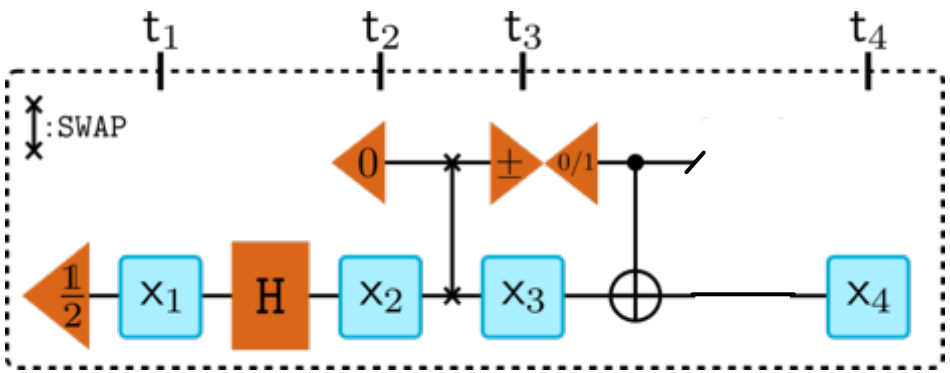

4-POINT STATISTICS ARE MARKOVIAN

$$\mathbb{P}(x_1) = \frac{1}{2}$$

$$\mathbb{P}(x_2|x_1) = \frac{1}{2}$$

$$\mathbb{P}(x_3|x_2, x_1) = \mathbb{P}(x_3|x_2) = \begin{cases} 1 & x_3 = 0 \\ 0 & x_3 = 1 \end{cases}$$

$$\mathbb{P}(x_4|x_3, x_2, x_1) = \mathbb{P}(x_4|x_3) = \begin{cases} \frac{1}{2} & x_3 = 0 \\ 0 & x_3 = 1 \end{cases}$$

NON-MARKOVIAN SUBSTATISTICS

$$\mathbb{P}(x_1) = \frac{1}{2}$$

$$\mathbb{P}(x_3|\mathcal{I}_2, x_1) = \begin{cases} 1 & x_3 \\ 0 & \end{cases}$$

$$\mathbb{P}(x_4|x_3, \mathcal{I}_2, x_1) = \begin{cases} \delta_{x_4 x_1} & x_3 = 0 \\ 0 & x_3 = 1 \end{cases} \neq \mathbb{P}(x_4|x_3)$$

COULD NOT HAVE COME FROM A MEMORYLESS PROCESS

INCOMPATIBLE MARKOVIAN STATISTICS: AN EVEN STRONGER WITNESS TO THE NECESSITY OF MEMORY

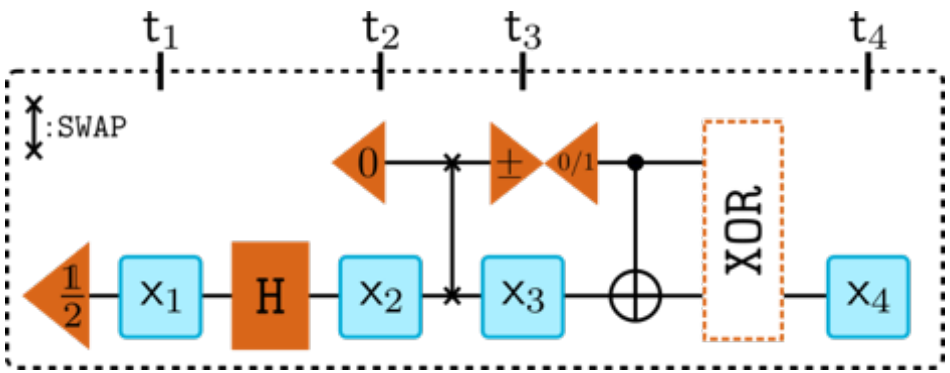

4-POINT STATISTICS ARE MARKOVIAN

$$\mathbb{P}(x_1) = \frac{1}{2}$$

$$\mathbb{P}(x_2|x_1) = \frac{1}{2}$$

$$\mathbb{P}(x_3|x_2, x_1) = \mathbb{P}(x_3|x_2) = \begin{cases} 1 & x_3 = 0 \\ 0 & x_3 = 1 \end{cases}$$

$$\mathbb{P}(x_4|x_3, x_2, x_1) = \mathbb{P}(x_4|x_3) = \begin{cases} \frac{1}{2} & x_3 = 0 \\ 0 & x_3 = 1 \end{cases}$$

INCOMPATIBLE MARKOVIAN STATISTICS: AN EVEN STRONGER WITNESS TO THE NECESSITY OF MEMORY

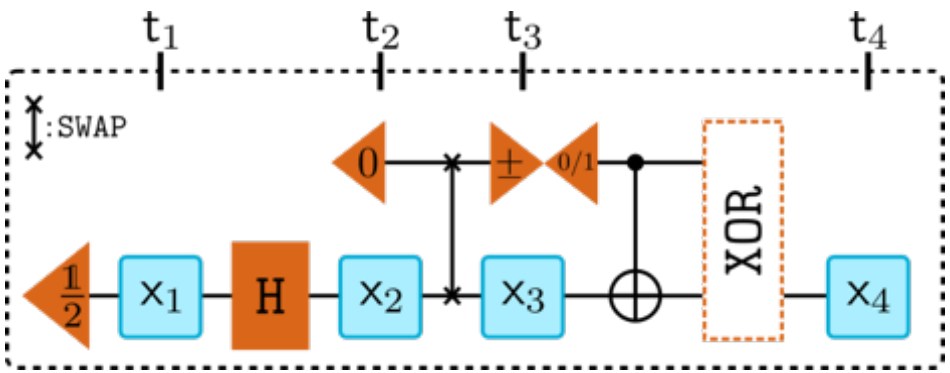

4-POINT STATISTICS ARE MARKOVIAN

$$\mathbb{P}(x_1) = \frac{1}{2}$$

$$\mathbb{P}(x_2|x_1) = \frac{1}{2}$$

$$\mathbb{P}(x_3|x_2, x_1) = \mathbb{P}(x_3|x_2) = \begin{cases} 1 & x_3 = 0 \\ 0 & x_3 = 1 \end{cases}$$

$$\mathbb{P}(x_4|x_3, x_2, x_1) = \mathbb{P}(x_4|x_3) = \begin{cases} \frac{1}{2} & x_3 = 0 \\ 0 & x_3 = 1 \end{cases}$$

ALL SUBSTATISTICS ALSO MARKOVIAN

$$\mathbb{P}(x_1) = \frac{1}{2}$$

$$\mathbb{P}(x_4|\mathcal{I}_3, x_2, x_1) = \frac{1}{2}$$

$$\mathbb{P}(x_3|\mathcal{I}_2, x_1) = \begin{cases} 1 & x_3 = 0 \\ 0 & x_3 = 1 \end{cases}$$

$$\mathbb{P}(x_4|x_3, \mathcal{I}_2, x_1) = \begin{cases} 1 & x_4, x_3 = 0 \\ 0 & x_4, x_3 \neq 0 \end{cases}$$

INCOMPATIBLE MARKOVIAN STATISTICS: AN EVEN STRONGER WITNESS TO THE NECESSITY OF MEMORY

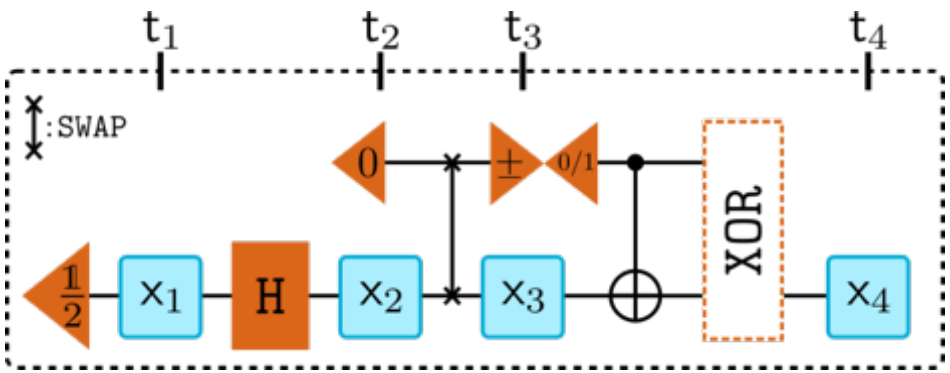

4-POINT STATISTICS ARE MARKOVIAN

$$\mathbb{P}(x_1) = \frac{1}{2}$$

$$\mathbb{P}(x_2|x_1) = \frac{1}{2}$$

$$\mathbb{P}(x_3|x_2, x_1) = \mathbb{P}(x_3|x_2) = \begin{cases} 1 & x_3 = 0 \\ 0 & x_3 = 1 \end{cases}$$

$$\mathbb{P}(x_4|x_3, x_2, x_1) = \mathbb{P}(x_4|x_3) = \begin{cases} \frac{1}{2} & x_3 = 0 \\ 0 & x_3 = 1 \end{cases}$$

$$\neq$$

ALL SUBSTATISTICS ALSO MARKOVIAN

$$\mathbb{P}(x_1) = \frac{1}{2}$$

$$\mathbb{P}(x_4|\mathcal{I}_3, x_2, x_1) = \frac{1}{2}$$

$$\mathbb{P}(x_3|\mathcal{I}_2, x_1) = \begin{cases} 1 & x_3 = 0 \\ 0 & x_3 = 1 \end{cases}$$

$$\mathbb{P}(x_4|x_3, \mathcal{I}_2, x_1) = \begin{cases} 1 & x_4, x_3 = 0 \\ 0 & x_4, x_3 \neq 0 \end{cases}$$

INCOMPATIBLE MARKOVIAN STATISTICS: AN EVEN STRONGER WITNESS TO THE NECESSITY OF MEMORY

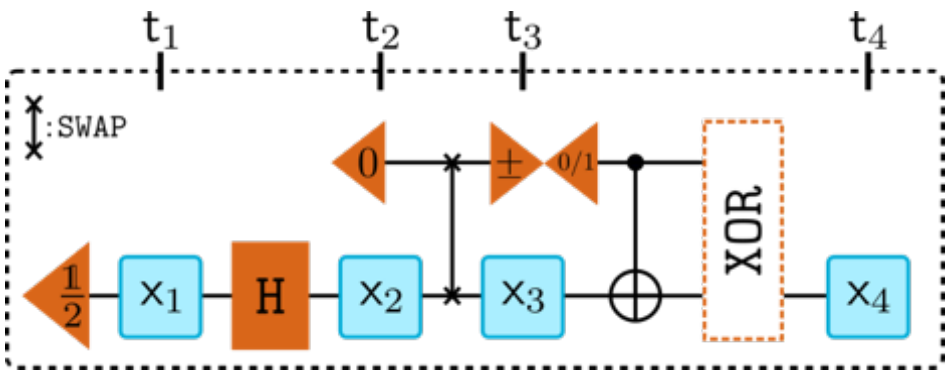

4-POINT STATISTICS ARE MARKOVIAN

$$\mathbb{P}(x_1) = \frac{1}{2}$$

$$\mathbb{P}(x_2|x_1) = \frac{1}{2}$$

$$\mathbb{P}(x_3|x_2, x_1) = \mathbb{P}(x_3|x_2) = \begin{cases} 1 & \\ 0 & \end{cases}$$

$$\mathbb{P}(x_4|x_3, x_2, x_1) = \mathbb{P}(x_4|x_3) = \begin{cases} \frac{1}{2} & x_3 = 0 \\ 0 & x_3 = 1 \end{cases}$$

$$\neq$$

ALL SUBSTATISTICS ALSO MARKOVIAN

$$\mathbb{P}(x_1) = \frac{1}{2}$$

$$x_1) = \frac{1}{2}$$

$$= \begin{cases} 1 & x_3 = 0 \\ 0 & x_3 = 1 \end{cases}$$

$$\mathbb{P}(x_4|x_3, \mathcal{I}_2, x_1) = \begin{cases} 1 & x_4, x_3 = 0 \\ 0 & x_4, x_3 \neq 0 \end{cases}$$

COND. PROBS. FROM MEMORYLESS PROCESS MUST BE INDEP. OF HOW THEY ARE OBTAINED

INCOMPATIBLE MARKOVIAN STATISTICS: AN EVEN STRONGER WITNESS TO THE NECESSITY OF MEMORY

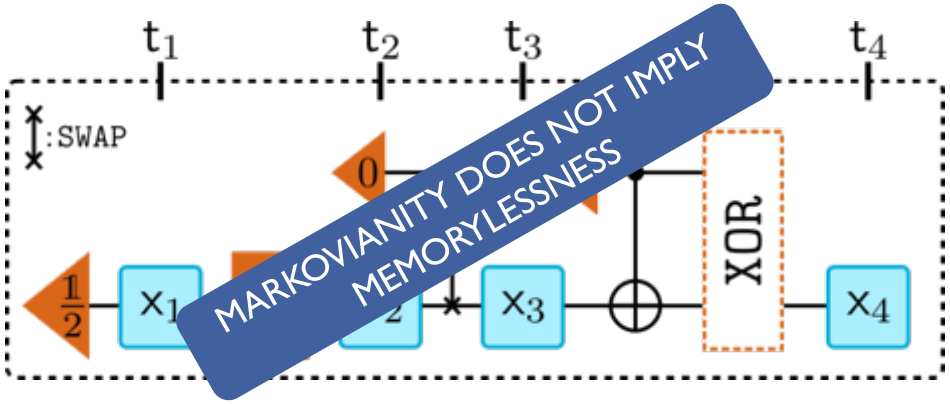

4-POINT STATISTICS ARE MARKOVIAN

$$\mathbb{P}(x_1) = \frac{1}{2}$$

$$\mathbb{P}(x_2|x_1) = \frac{1}{2}$$

$$\mathbb{P}(x_3|x_2, x_1) = \mathbb{P}(x_3|x_2) = \begin{cases} 1 & \\ 0 & \end{cases}$$

$$\mathbb{P}(x_4|x_3, x_2, x_1) = \mathbb{P}(x_4|x_3) = \begin{cases} \frac{1}{2} & x_3 = 0 \\ 0 & x_3 = 1 \end{cases}$$

ALL SUBSTATISTICS ALSO MARKOVIAN

$$\mathbb{P}(x_1) = \frac{1}{2}$$

$$x_1) = \frac{1}{2}$$

$$= \begin{cases} 1 & x_3 = 0 \\ 0 & x_3 = 1 \end{cases}$$

$$\neq \quad \mathbb{P}(x_4|x_3, \mathcal{I}_2, x_1) = \begin{cases} 1 & x_4, x_3 = 0 \\ 0 & x_4, x_3 \neq 0 \end{cases}$$

COND. PROBS. FROM MEMORYLESS PROCESS MUST BE INDEP. OF HOW THEY ARE OBTAINED

CONCLUSIONS AND OPEN QUESTIONS

- **MEMORY** IS A KIND OF QUANTUM RESOURCE THAT IS SOMETIMES **REQUIRED** TO IMPLEMENT PROCESSES THAT ULTIMATELY HIDE IT… THINK: MAPS THAT PRESERVE SEPARABLE STATES THAT CANNOT BE IMPLEMENTED WITH LOCC; NON-SIGNALLING MAPS THAT REQUIRE SIGNALLING…

ARXIV:2204.08298

CONCLUSIONS AND OPEN QUESTIONS

- **MEMORY** IS A KIND OF QUANTUM RESOURCE THAT IS SOMETIMES **REQUIRED** TO IMPLEMENT PROCESSES THAT ULTIMATELY HIDE IT… THINK: MAPS THAT PRESERVE SEPARABLE STATES THAT CANNOT BE IMPLEMENTED WITH LOCC; NON-SIGNALLING MAPS THAT REQUIRE SIGNALLING…
- ACTIVATION OF HIDDEN QUANTUM MEMORY IS A **GENUINELY QUANTUM PHENOMENA**: IT CANNOT HAPPEN FOR ANY PROCESS FOR WHICH THE MEASUREMENTS ARE NON-INVASIVE (I.E. THAT DON'T VIOLATE A LEGGET-GARG TYPE INEQUALITY)

ARXIV:2204.08298

CONCLUSIONS AND OPEN QUESTIONS

- **MEMORY** IS A KIND OF QUANTUM RESOURCE THAT IS SOMETIMES **REQUIRED** TO IMPLEMENT PROCESSES THAT ULTIMATELY HIDE IT… THINK: MAPS THAT PRESERVE SEPARABLE STATES THAT CANNOT BE IMPLEMENTED WITH LOCC; NON-SIGNALLING MAPS THAT REQUIRE SIGNALLING…
- ACTIVATION OF HIDDEN QUANTUM MEMORY IS A **GENUINELY QUANTUM PHENOMENA**: IT CANNOT HAPPEN FOR ANY PROCESS FOR WHICH THE MEASUREMENTS ARE NON-INVASIVE (I.E. THAT DON'T VIOLATE A LEGGET-GARG TYPE INEQUALITY)
- MEMORY IS A **GENUINELY MULTI-TIME PROPERTY**: EVEN IF ALL SETS OF SUB-STATISTICS ARE MARKOVIAN, ONE STILL CANNOT CONCLUDE THAT THE PROCESS CAN BE DESCRIBED IN A MEMORYLESS MANNER

ARXIV:2204.08298

CONCLUSIONS AND OPEN QUESTIONS

- **MEMORY** IS A KIND OF QUANTUM RESOURCE THAT IS SOMETIMES **REQUIRED** TO IMPLEMENT PROCESSES THAT ULTIMATELY HIDE IT… THINK: MAPS THAT PRESERVE SEPARABLE STATES THAT CANNOT BE IMPLEMENTED WITH LOCC; NON-SIGNALLING MAPS THAT REQUIRE SIGNALLING…
- ACTIVATION OF HIDDEN QUANTUM MEMORY IS A **GENUINELY QUANTUM PHENOMENA**: IT CANNOT HAPPEN FOR ANY PROCESS FOR WHICH THE MEASUREMENTS ARE NON-INVASIVE (I.E. THAT DON'T VIOLATE A LEGGET-GARG TYPE INEQUALITY)
- MEMORY IS A **GENUINELY MULTI-TIME PROPERTY**: EVEN IF ALL SETS OF SUB-STATISTICS ARE MARKOVIAN, ONE STILL CANNOT CONCLUDE THAT THE PROCESS CAN BE DESCRIBED IN A MEMORYLESS MANNER
- OPEN QUESTION: ARE THERE MARKOVIAN STATISTICS THAT ARE ALL **COMPATIBLE / EQUAL** BUT NONETHELESS **CANNOT BE DESCRIBED** BY A MEMORYLESS QUANTUM PROCESS (E.G. TRYING TO REPRODUCE THEM BREAKS COMPLETE POSITIVITY OR SOME OTHER PROPERTY…?)

ARXIV:2204.08298